Flush Mount Manifold Bodies

Flush Mount Inlets (Clappered)

Used by the fire department to supply additional water to a building's fire protection system. These flush mounted units are generally concealed behind the outside wall of the building. Bodies are constructed of cast brass.

250 GPM per inlet, each inlet features individual drop clapper. U/L Listed.

FDC121-01

Part #	Size	Outlet Type	Inlet Type	Outlet Location	A
FDC121-01	4" x 2½" x 2½"	Female NPT	Female NPT	Back	7"
FDC122-01	4" x 2½" x 2½"	Female NPT	Female NPT	Bottom	7"
FDC123-01	4" x 2½" x 2½"	Female NPT	Female NPT	Top	7"
FDC121-03	4" x 2½" x 2½"	Groove	Female NPT	Back	7"
FDC122-03	4" x 2½" x 2½"	Groove	Female NPT	Bottom	7"
FDC123-03	4" x 2½" x 2½"	Groove	Female NPT	Top	7"
FDC121-02	6" x 2½" x 2½"	Female NPT	Female NPT	Back	7 5/8"
FDC122-02	6" x 2½" x 2½"	Female NPT	Female NPT	Bottom	7 5/8"
FDC123-02	6" x 2½" x 2½"	Female NPT	Female NPT	Top	7 5/8"

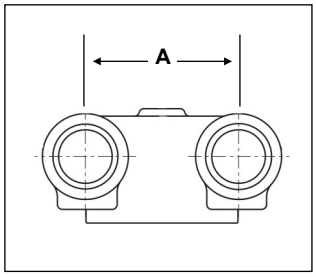

Inlet / Outlet Connection Bodies (Clapperless)

Designed for a variety of uses: flush and free-standing FDCs, flush and free-standing test headers and hydrants, and flush roof manifolds.

2-Way bodies are made from cast brass.

3-Way, 4-Way and 6-Way bodies are made from schedule 40 steel

Each inlet rated at 250 GPM

Working pressure rated at 300 PSI

FDC131-03SG

Part #	Type	Size	Outlet Type	Inlet Type	Outlet Location	Finish	½" Taps	Weight
PT121-01	2-Way	4" x 2½" x 2½"	Female NPT	Female NPT	Back	Rough Brass	0	14 lbs.
PT122-01	2-Way	4" x 2½" x 2½"	Female NPT	Female NPT	Angle	Rough Brass	1	17 lbs.
PT121-02	2-Way	6" x 2½" x 2½"	Female NPT	Female NPT	Back	Rough Brass	0	15 lbs.
PT122-02	2-Way	6" x 2½" x 2½"	Female NPT	Female NPT	Angle	Rough Brass	1	18 lbs.
FDC134-03SG	3-Way	6" x 3" x 3" x 3"	Groove	Groove	End	Red Enamel	3	39 lbs.
FDC131-03SG	3-Way	6" x 3" x 3" x 3"	Groove	Groove	Back	Red Enamel	2	45 lbs.
FDC132-03SG	3-Way	6" x 3" x 3" x 3"	Groove	Groove	Angle	Red Enamel	1	45 lbs.
FDC134-03S	3-Way	6" x 3" x 3" x 3"	Groove	Female NPT	End	Red Enamel	3	39 lbs.
FDC131-03S	3-Way	6" x 3" x 3" x 3"	Groove	Female NPT	Back	Red Enamel	2	45 lbs.
FDC132-03S	3-Way	6" x 3" x 3" x 3"	Groove	Female NPT	Angle	Red Enamel	1	45 lbs.
FDC134-01SG	3-Way	6" x 3" x 3" x 3"	Female NPT	Groove	End	Red Enamel	3	39 lbs.
FDC131-01SG	3-Way	6" x 3" x 3" x 3"	Female NPT	Groove	Back	Red Enamel	2	45 lbs.
FDC132-01SG	3-Way	6" x 3" x 3" x 3"	Female NPT	Groove	Angle	Red Enamel	1	45 lbs.
FDC134-01S	3-Way	6" x 3" x 3" x 3"	Female NPT	Female NPT	End	Red Enamel	3	39 lbs.
FDC131-01S	3-Way	6" x 3" x 3" x 3"	Female NPT	Female NPT	Back	Red Enamel	2	45 lbs.
FDC132-01S	3-Way	6" x 3" x 3" x 3"	Female NPT	Female NPT	Angle	Red Enamel	1	45 lbs.

222 Bemis Road, Fitchburg, MA 01420 | Tel: 978-345-7570 | Fax: 978-345-7572
www.americanfiresupply.com | sales@americanfiresupply.com

Flush Mount Manifold Bodies

Part #	Type	Size	Outlet Type	Inlet Type	Outlet Location	Finish	½" Taps	Weight
FDC144-03SG	4-Way	6" x 3" x 3" x 3" x 3"	Groove	Groove	End	Red Enamel	3	50 lbs.
FDC141-03SG	4-Way	6" x 3" x 3" x 3" x 3"	Groove	Groove	Back	Red Enamel	2	56 lbs.
FDC142-03SG	4-Way	6" x 3" x 3" x 3" x 3"	Groove	Groove	Angle	Red Enamel	1	56 lbs.
FDC144-03S	4-Way	6" x 3" x 3" x 3" x 3"	Groove	Female NPT	End	Red Enamel	3	50 lbs.
FDC141-03S	4-Way	6" x 3" x 3" x 3" x 3"	Groove	Female NPT	Back	Red Enamel	2	56 lbs.
FDC142-03S	4-Way	6" x 3" x 3" x 3" x 3"	Groove	Female NPT	Angle	Red Enamel	1	56 lbs.
FDC144-01SG	4-Way	6" x 3" x 3" x 3" x 3"	Female NPT	Groove	End	Red Enamel	3	50 lbs.
FDC141-01SG	4-Way	6" x 3" x 3" x 3" x 3"	Female NPT	Groove	Back	Red Enamel	2	56 lbs.
FDC142-01SG	4-Way	6" x 3" x 3" x 3" x 3"	Female NPT	Groove	Angle	Red Enamel	1	56 lbs.
FDC144-01S	4-Way	6" x 3" x 3" x 3" x 3"	Female NPT	Female NPT	End	Red Enamel	3	50 lbs.
FDC141-01S	4-Way	6" x 3" x 3" x 3" x 3"	Female NPT	Female NPT	Back	Red Enamel	2	56 lbs.
FDC142-01S	4-Way	6" x 3" x 3" x 3" x 3"	Female NPT	Female NPT	Angle	Red Enamel	1	60 lbs.
FDC146-03SG	4-Way	6" x 3" x 3" x 3" x 3" **(square)**	Groove	Groove	Back	Red Enamel	1	34 lbs.
FDC146-03S	4-Way	6" x 3" x 3" x 3" x 3" **(square)**	Groove	Female NPT	Back	Red Enamel	1	36 lbs.
FDC145-03SG	4-Way	6" x 3" x 3" x 3" x 3" **(square)**	Groove	Groove	Angle	Red Enamel	1	37 lbs.
FDC145-03S	4-Way	6" x 3" x 3" x 3" x 3" **(square)**	Groove	Female NPT	Angle	Red Enamel	1	39 lbs.
FDC164-03SG	6-Way	6" x 3" x 3" x 3" x 3" x 3" x 3"	Groove	Groove	End	Red Enamel	3	72 lbs.
FDC164-03S	6-Way	6" x 3" x 3" x 3" x 3" x 3" x 3"	Groove	Female NPT	End	Red Enamel	3	72 lbs.
FDC164-04SG	6-Way	8" x 3" x 3" x 3" x 3" x 3" x 3"	Groove	Groove	End	Red Enamel	3	79 lbs.
FDC164-04S	6-Way	8" x 3" x 3" x 3" x 3" x 3" x 3"	Groove	Female NPT	End	Red Enamel	3	79 lbs.

Dimensions continued on page 3

222 Bemis Road, Fitchburg, MA 01420 | Tel: 978-345-7570 | Fax: 978-345-7572
www.americanfiresupply.com | sales@americanfiresupply.com

Flush Mount Manifold Bodies

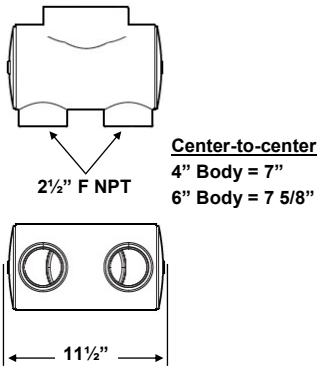

2-Way - Back Inlet/Outlet

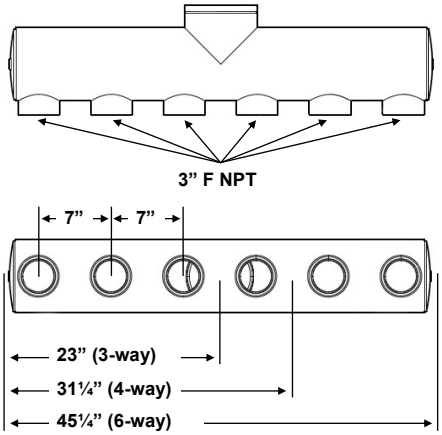

3-, 4-, and 6-Way - Back Inlet/Outlet

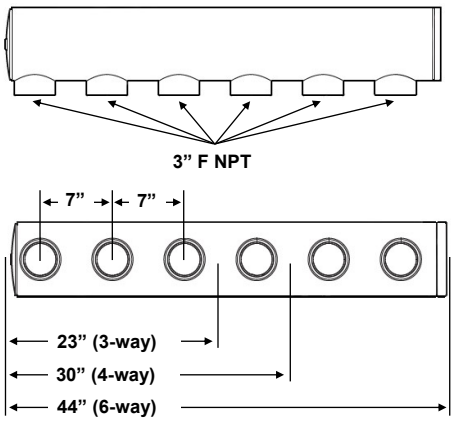

3-, 4-, and 6-Way - End Inlet/Outlet

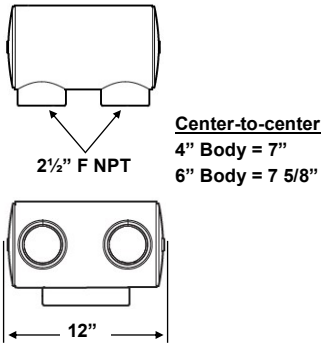

2-Way - Angle Inlet/Outlet

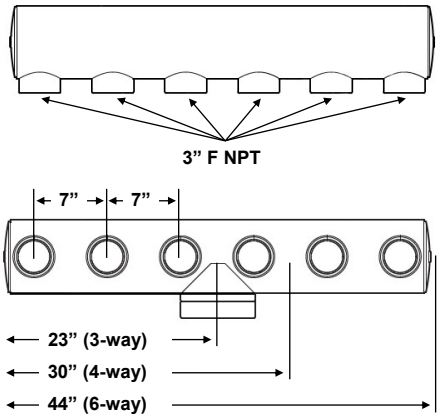

3-, 4-, and 6-Way - Angle Inlet/Outlet

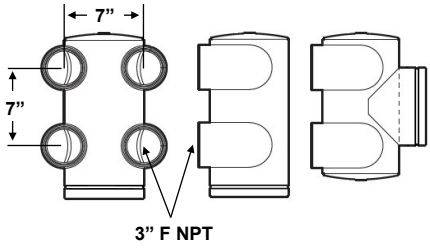

4-Way Square - Angle and Back Inlet/Outlet

222 Bemis Road, Fitchburg, MA 01420 | Tel: 978-345-7570 | Fax: 978-345-7572
www.americanfiresupply.com | sales@americanfiresupply.com